Sunster

MADE IN CHINA

Sunster

PLUMBING HEATER



Water circulation system for family small cars,
SUV series models,pickup trucks,agricultural vehicles,and vans.

OPERATION INSTRUCTIONS

I think you are not very familiar with water heated parking heaters,but this type of heater has been widely used and applied in Europe for many years.So please rest assured to use it.This type of heater has become a standard configuration for many luxury brands such as Land Rover,Benz,BMW,Audi, and some imported models,and most models also have the option of installing it.The most important thing is that installing it can reduce the wear and tear on the engine caused by cold starts and reduce the fuel consumption of warm up after cold starts in winter.It not only saves you time and fuel but also allows warmth to accompany your car without being limited by the garage and environment.It will change your driving life in winter!

Warning!

The installation,repair,and maintenance of this heater require professional knowledge and specialized tools.Incorrect setting or installation,repair,and maintenance can lead to damage to the machine or the occurrence of accidents.

---Parking heaters are prohibited from starting near gas stations and fuel depots,as well as in areas where flammable gases or dust may form,where flammable liquids or solid materials accumulate(such as near fuel,coal and sawdust,barns,hay and leaves,cardboard,paper,etc.).In enclosed spaces(such as garages),do not start and run the heater even if using a timer and remote control.

After the installation of the parking heater,the air release bolt must be loosened to discharge the gas in the pipe before the first heating.Then heating is conducted.Dry burning without water is strictly prohibited!

---Whether used or not,the authorized dealers should be asked to check and maintain the heating system at least once every two years in order to maintain the best performance.

---The heater can only use the fuel specified on the nameplate and can only run at the rated voltage marked on the nameplate.In the event of smoke,abnormal combustion sound,or abnormal fuel odor, the heater switch must be immediately turned off to stop the heater and drain the fuel.Before starting the heating again,please ensure that the equipment is inspected by a professional before starting use again.

---Operate the heater in a cold engine and minimum blast state for ten minutes at least once a year.

--Before cleaning the heater,please turn it off.High pressure cleaning systems or compressed air cannot be used for cleaning.

We believe that the relevant personnel at the service station or service outlet that installed the heater for you have provided you with a satisfactory explanation of the principle and operating method of this new type of heater.In this operating manual,we will once again point out the overall situation and precautions on how to safely use the heating equipment.In order to understand and gain a detailed understanding of the various functions of the heating equipment,please carefully read the instructions for using the product.If lost,please contact your authorized dealer immediately to obtain a new operating manual.

Table of content

I.Overview
II.Main technical parameters and applicable fields
II.Working principle of parking heater
IV.Installation and usage precautions
1.Allowable installation angle range
2.Installation of combustion-supporting air intake duct
3.Installation of heater exhaust device
4.Installation and precautions for dosing oil pump
5.Installation and precautions of oil extractor
6.Installation and precautions of heater wiring harness
7.Water circuit installation and precautions:
V.Heater operation and function display
1.Description of classic controller and remote control
2.Instructions of YWH-B801 Water Heating Mobile Phone Controller
3.Instructions for YWH-A201 controller switch
VI.Description of common fault codes
VII.Repair and maintenance
VIII.Measures for heater failure
IX.Circuit diagram of the main board

I.Overview

A water heated parking heater is a device that uses on-board battery power supply and vehicle oil as fuel,and circulates heat to the vehicle's engine and water circulation system based on the principle of combustion and heat exchange.The water-heated parking heater has functions such as manual start, timed start,remote control start,and mobile remote start,making it flexible and suitable for different heating needs.On the basis of adding fuel that meets the requirements,the heater can run stably in environments above-40℃.

II.Main technical parameters and applicable fields

Model	5KW
Rated heat flow rate	5KW
Fuel	Gasoline/Diesel
Fuel consumption	0.55L/H
Rated voltage	12V
Work voltage	9V～16V
Power consumption	Power consumption≤39W
Weight	2.3Kg±0.5
Overall dimensions	230*90*165
Remote control distance	800 meters
Applicable models	Water circulation system for family small cars, SUV series models,pickup trucks,agricultural vehicles, and vans.

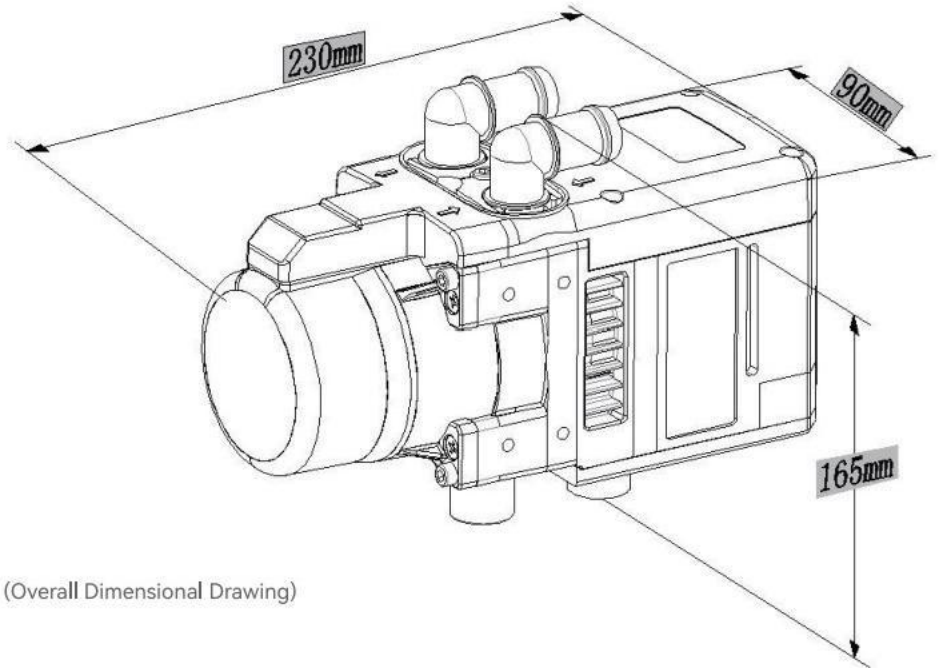

(Overall Dimensional Drawing)

1.Sensor pressure plate
2. Ultra high temperature sensor
3. Water temperature sensor
4. Outer water jacket
5. Water jacket sealing ring
6. Water nozzle pressure plate
7. Inner water jacket

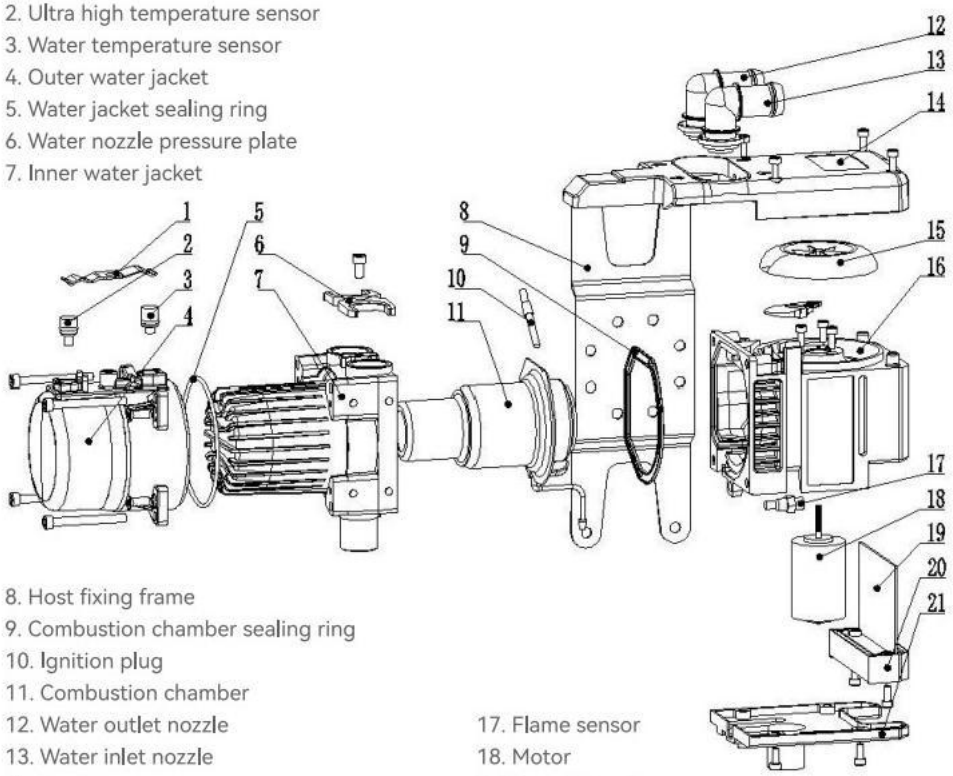

8. Host fixing frame
9. Combustion chamber sealing ring
10. Ignition plug
11. Combustion chamber
12. Water outlet nozzle
13. Water inlet nozzle
14.Host upper cover
15.Combustion-support wind wheel
16.Aluminum body
17. Flame sensor
18. Motor
19.Circuit board
20.Circuit board terminal plug-in
21.Host lower cover

III.Working principle of parking heater

The parking heater does not require external power supply and can achieve the effect of idle heating in winter when the vehicle is not started.The product has an independent water pump and oil pump, which are installed in series between the engine and the heater water tank of vehicles.The electricity is from the vehicle battery,and the oil pump is controlled by a computer to extract a small amount of fuel from the fuel tank of the vehicle,which is then atomized in the combustion chamber and ignited by an ignition plug.By heating the anti-freeze solution through the heat exchange system of the heater and circulating it to the engine,the temperature of the vehicle engine and the heater gradually increases.When the water temperature reaches 80℃,the heater automatically stops,and the remote controller wil prompt that the heating is completed.

This heater can be used in conjunction with the heating equipment provided by the vehicle itself, without any equipment conflicts.

IV.Installation and usage precautions

1.Allowable installation angle range

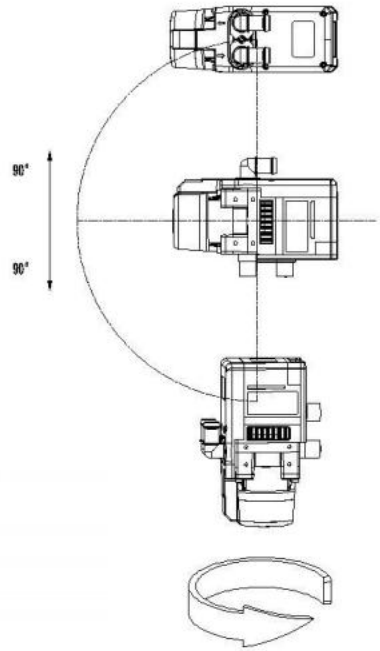

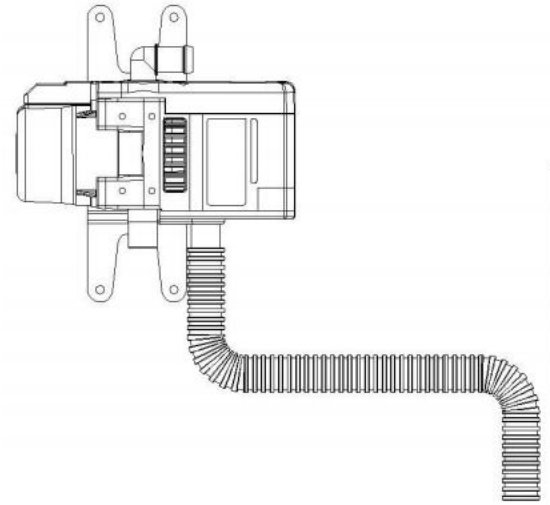

2.Installation of combustion-supporting air intake duct

There is a corrugated hose with an inner diameter of 25 millimeters in the installation component. According to the installation situation,the shortest length of the combustion-supporting air duct cannot be less than 20 centimeters;the maximum length of the combustion-supporting air duct cannot exceed 1.5 meters.Fix it on the heater with a pipe clamp and another end is fixed to the vehicle body with a bracket.

3.Installation of heater exhaust device

The direction of installing the exhaust port should not face the airflow and should not be blocked by dirt such as mud,rain,or snow.

The installation component contains an exhaust pipe with an inner diameter of 25mm and a length of 60cm.Depending on the installation situation,the exhaust pipe can be shortened to 20 centimeters or extended to a maximum of 1 meter. Fix one end of the exhaust pipe to the heater with a pipe clamp,and fix another end to the vehicle body with a bracket.

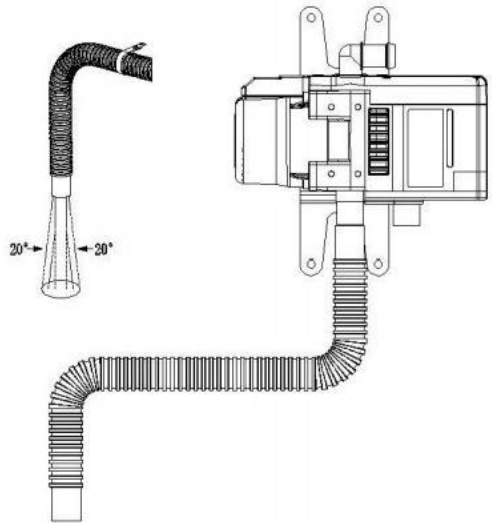

(OverallDimensional Drawing)

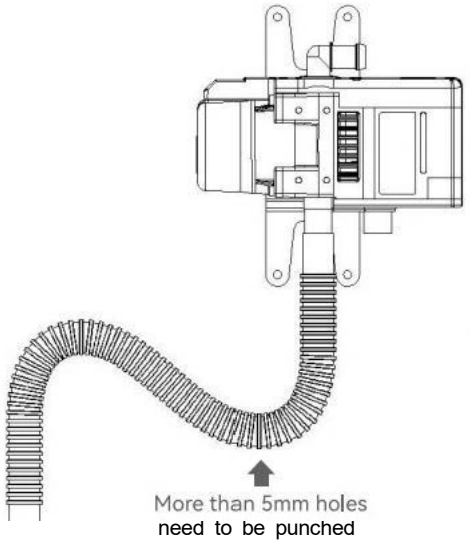

0

O o

Travel direction of vehicle

Wrong installation diagram

4.Installation and precautions for dosing oil pump

The installation of the oil circuit should preferably be tilted upwards to facilitate the discharge of gas from the oil circuit.Pay attention to checking the vent holes of the fuel tank to avoid negative pressure in the oil tank Oil pipelines should be located away from heat sources, and should not be installed near silencers,exhaust pipes,etc.They should be protected with corrugated pipes and bundled at suitable places with a spacing of no more than 50cm.

Installation diagram of electromagnetic pump:

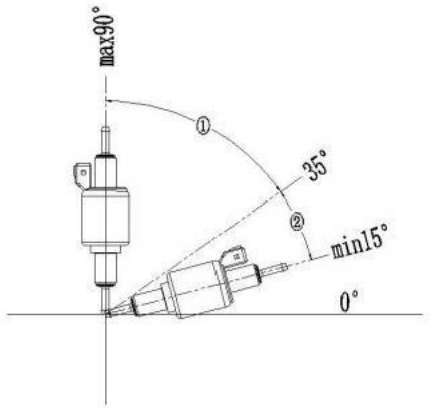

Installation angle of metering oil pump

When installing the metering oil pump,always pay attention to the upward inclination of the oil nozzle, and the installation angle should be greater than 15°.Priority should be given to the installation angle between 15°and 35°.

1.It is not allowed to select installation angles between 0°and 15°

2.Prioritize the installation angle between 15°and 35°.

3.Allow selection of installation angles between 35°and 90°.

Connection of oil pipes

When connecting the oil pipe,after inserting the heater oil nozzle,oil nozzle of the oil pump,oil extractor,and T-shaped tee oil nozzle into the rubber,a seamless connection should be formed with the oil pipe inserted at the other end to avoid the formation of bubbles in the oil circuit,generating noise,and affecting the combustion effect.

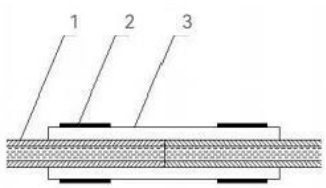

Correct

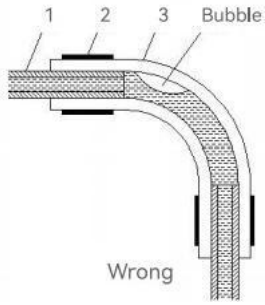

Wrong

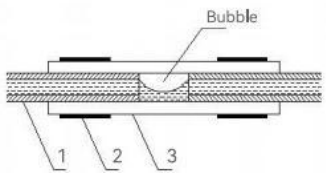

Wrong

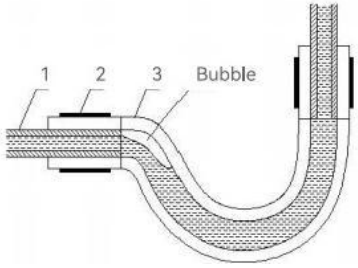

Wrong

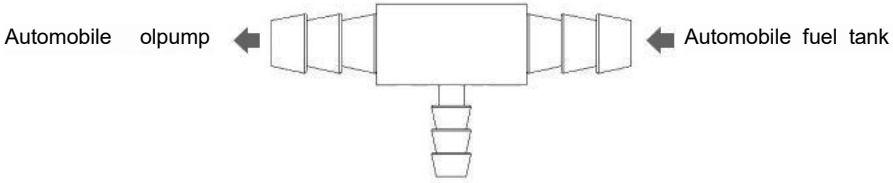

Oil pump of the oiler

Precautions for installation of T-shaped tee components for oil extraction

The oil extraction tee must be connected between the original vehicle oil tank and the original vehicle oil pump.It is prohibited to connect between the fuel pump and the engine of the original vehicle to prevent injecting the fuel into the heater by high pressure of oil pump of the original vehicle,causing great danger.Vehicles with the original oil pump installed in the fuel tank cannot use a T-shaped tee for oil extraction.Instead,an oil extractor should be used to directly extract oil from the tank.

5.Installation and precautions of oil extractor

For fuel tank oilextractor,at the time of installation,the length of metal suction pipe can be cut on the site.Then seal and connect it.

When installing the machine,open a 10mm hole on the upper end face of the oil tank to remove burrs; cut off oil tank oil extractor with an appropriate length(keep a distance of 10-20mm between the bottom of the suction pipe and the bottom of the oiltank).Install the oil extractor,install the sealing ring and pressure plate at a time,adjust the oil outlet direction properly,and lock it tightly at last.

When connecting the oil pipeline,each joint should be sealed to prevent air leakage and fuel supply failure.Pay attention to checking the air vent of the fuel tank.

The fuel pipe should be kept away from the heat source to avoid damaging the pipeline.

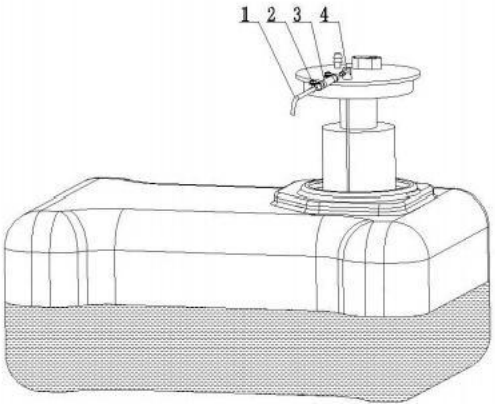

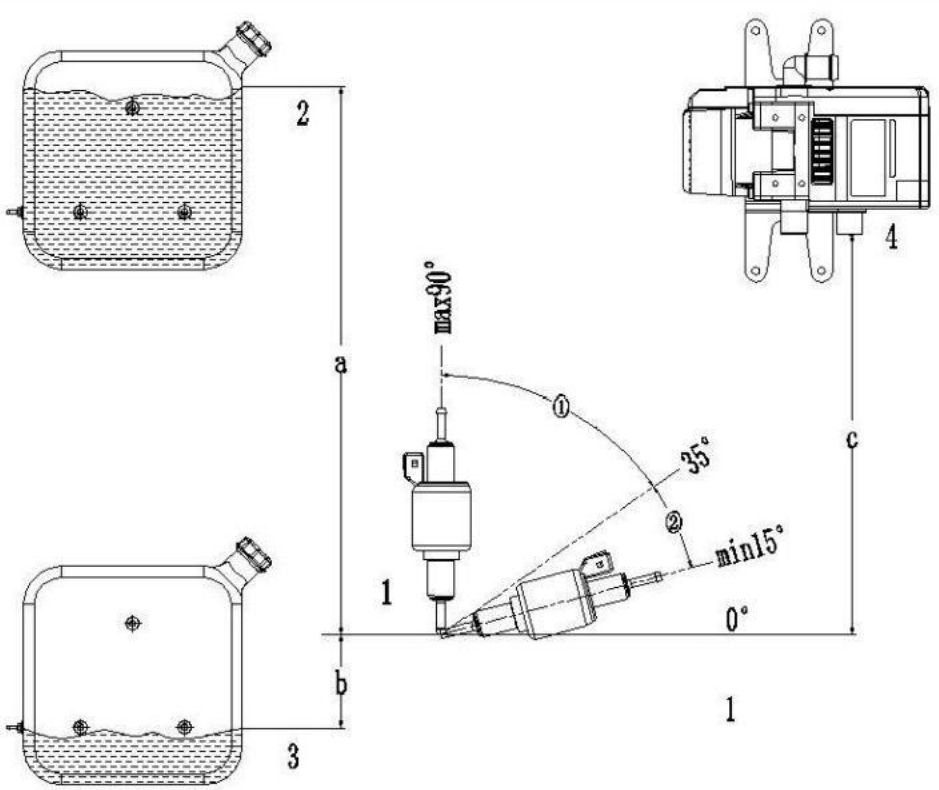

1:Oil pump

2:Maximum fuel level

3:Minimum fuel level

4:Heater oil inlet

a:Maximum 3 meters
b:Maximum 1meter
c:Maximum 1.5 meters

(The length of the oil pipe between the fuel tank and the oil pump cannot exceed 1.5 meters,and the distance between the oil pump and the heater cannot exceed 6 meters)

6.Installation and precautions of heater wiring harness

The positive and negative poles of the wiring harness should be directly connected to the positive and negative poles of the vehicle battery to ensure that the heater is continuously powered and operates normally.

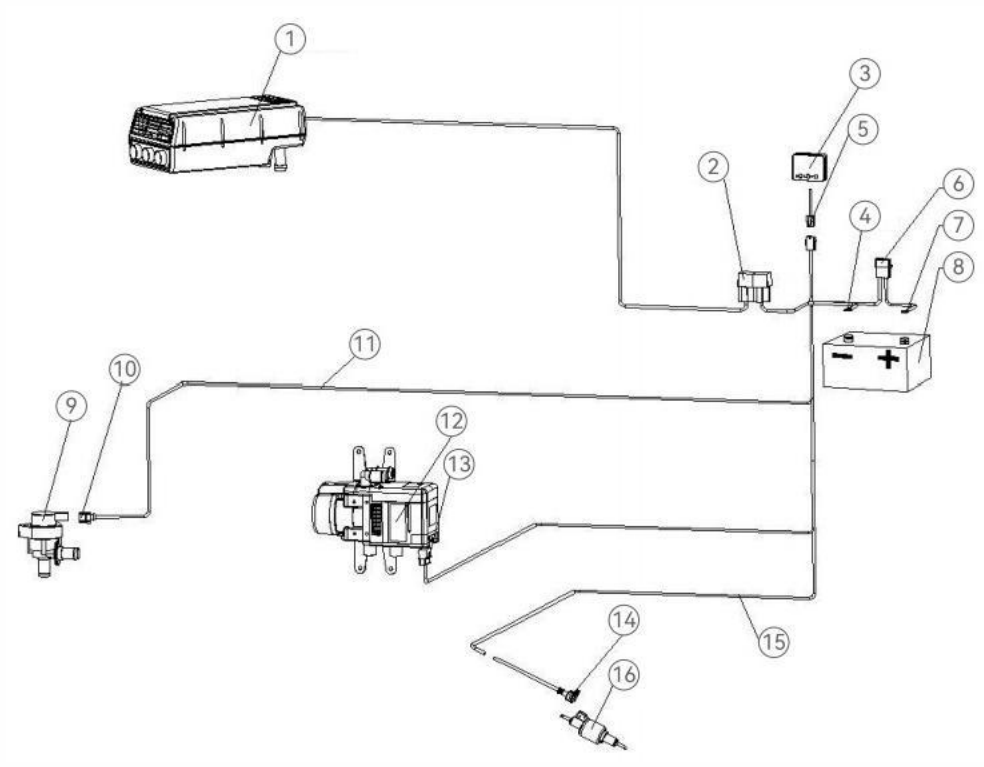

1.Automobile heater
2.Heater relay
3.Heater switch
4.Negative pole
5.Switch wire harness connector
6.Fuse
7.Positive pole
8.Battery
9.Water pump
10.Water pump connector
11.Water pump harness
12.Heater
13.Heater connector
14.Oil pump connector
15.Oil pump wiring harness
16.Oi pump

7.Water circuit installation and precautions

1.The installation of the heater water pump should be 20 centimeters below the engine level,ensuring that the direction of water flow is consistent with the water flow of water pump of the original vehicle. Vehicles with thermostatic valves for the heater need to be installed over the thermostatic valve.

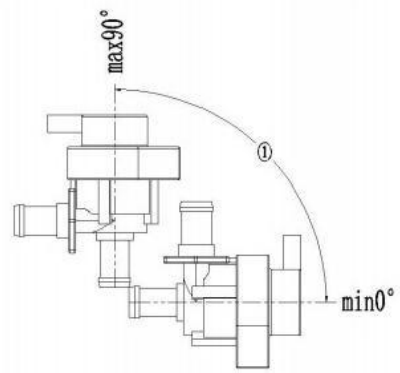

(Allowable installation angle range of water pump)

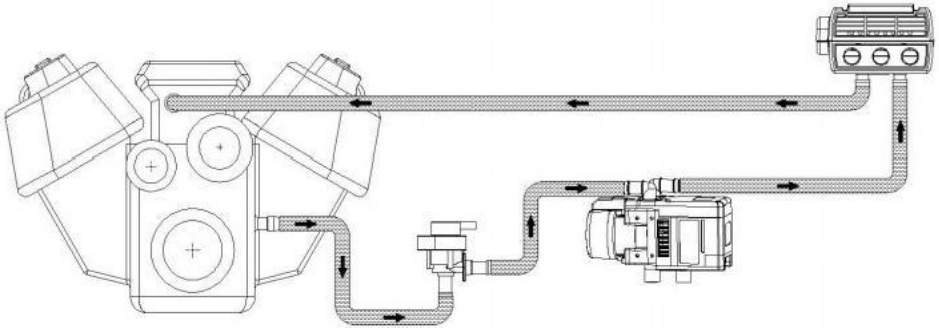

(Installation diagram 1)

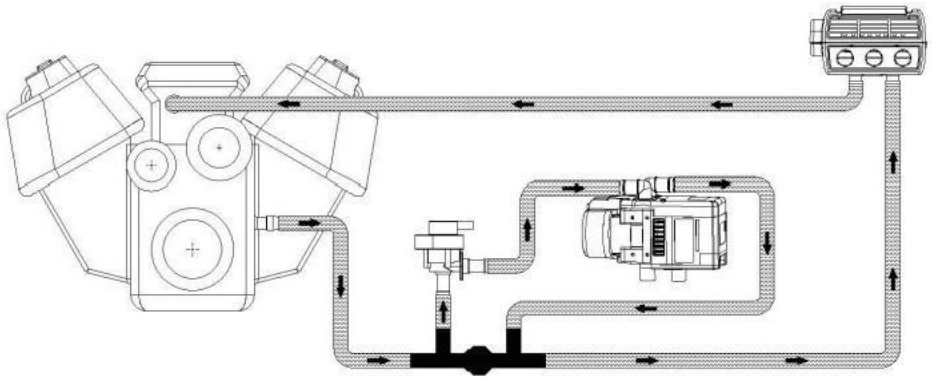

(Installation diagram 2)

Quick installation diagram:

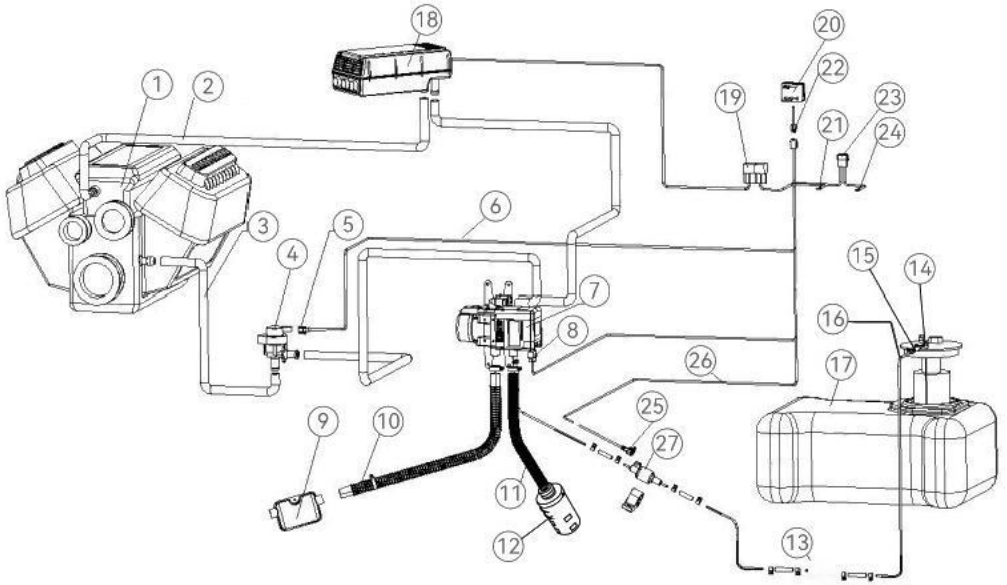

1.Engine
2.Heater return pipe
3.Heater inlet pipe
4.Water pump
5.Water pump connector
6.Water pump harness
7.Heater
8.Heater connector
9.Silencer
10.Exhaust pipe
11.Intake duct
12.Air filter
13.Oil filter
14.Oil extractor
15.Oil pipe joint
16.Nylon oil pipe
17.Oil tank
18.Automobile heater
19.Heater relay
20.Heater switch
21.Negative pole
22.Switch wire harness connector
23.Fuse
24.Positive pole
25.Oil pump connector
26.Oil pump wiring harness
27.Oil pump

※ Heater debugging after installation

After theinstallation of the heater,it is necessary to exhaust first to fill the water pump with anti-freeze solution and fill the entire pipeline with anti-freeze solution.After the installation of the heater is completed,the engine can be started and the water pump of the engine can fill the entire parking heater and pipeline with water.Increase the throttle appropriately to facilitate the discharge of gas generated in the pipeline during installation.

Pay attention to checking the liquid level of the water tank and add an appropriate amount of anti-freeze solution to avoid water shortage in the water tank,which may cause the heater to malfunction.It is strictly prohibited to start the heater when there is no water.

V.Heater operation and function display

1. Overall display

(1) switch



①Specific data display area;

②Button (on/off), add key, minus key,set up);

(2) Remote control

① LCD display (display icon)

②Button (on/off), add key, minus key,set up; query key);

2. Operation instructions :

- On/off: After power on, the switch displays the current time. Press and hold [Power On/Off] for 3 seconds to turn on the device; After powering on, the current water temperature will be displayed on the page; after
- powering on, press and hold [Power On/Off] for 3 seconds to power off;

Project/Data Reconciliation: Press the [plus key] to increase the item/data by 1; press the [minus key] to decrease the item/data by 1;

- Power-on interface project settings:
- Project 1: After power on, press the power
- button to display the current time;
- Project 2: (T-01) Set the time for the first
- automatic start;
- Project 3: (t-02) Set the second automatic start time;
- Project 4: Running time, the switching range is 10 minutes to 4 hours, each press switches the unit to
- 10 minutes; the machine will automatically shut down when the countdown ends (40 minutes by default)

- Project 5: To set the operating water temperature, the switching range is 5℃-85℃, and the switching time is 5℃ each time you press it; it will automatically shut down when the target water temperature is reached (default is 70℃)
- Project 6: For the self-start switch setting, display A- ON means it is on, and display A- OF means it is off;
- : It will automatically stop when the temperature reaches 85℃, and only the water pump will work at this time. When the temperature is lower than 60℃, it will restart heating. You can operate without pressing the set water temperature and running time.

Project 8: Switch the voice function: switch the voice broadcast feedback language; CN is Chinese, EN is English, RU is Russian, OF means voice off; Press the [Settings] button to set. Press the [plus key]/[minus key] to modify;

- Press the [Add] key to enter the next item. After all settings are completed, press and hold the [Settings] button for 3 seconds to save and return to the running interface;

Engineering Mode: When the device is powered on, press and hold the [+] and [-] keys simultaneously for 3 seconds to enter engineering mode. Press the [Add Key] item +1, Press the [minus key] item -1, project

The display area shows data items in the following format;

001: heater mainboard version number;

002: Current operating mode;
003: t--1 housing temperature;
004: t--2 exhaust temperature
005: Power supply voltage;
006: Water pump current;

Two-way remote:

Press the remote control power button to turn on the device; press the query button for 5 seconds and the interface will display -pp-.At the same time, press the power button once and the current time will be displayed on the screen. Press the setting button for 3 seconds to enter the -pp- interface
the switch and the remote control will automatically connect; after automatic connection, the switch and the remote control will automatically exit the current page;

VI.Description of common fault codes

Fault display: When the heater fails, the display area flashes the fault code. Please refer to the table below for the fault type;

Fault Codes	Fault type	Fault Codes	Fault type
E-01	Second startup failure	E-11	Thermal plug failure
E-02	Turn off the flame	E-12	Water temperature high temperature protection 10 0 ℃
E-03	Voltage below 10V	E-13	case high temperature Protect 1 40 ℃
E-04	Voltage higher than 16V	E-14	High exhaust gas temperature Protect 1 0 0 0 ℃
E-05	Exhaust gas temperature sensor abnormality	E-15	Altitude sensor failure
E-06	Water temperature sensor abnormality	E-18	Server connection failed
E-07	Case temperature sensor abnormality	E-21	Fan lose speed
E-08	Oil pump failure	E-22	Abnormal wind speed
E-09	Fan Short	E-23	Wind speed current overload>8A
E-10	Water Pump Fault	E-24	Fan open road - none Huo you version Book
		E-25	Fan short circuit

VII.Repair and maintenance

After using the heater in winter,it should be removed from the vehicle for cleaning and maintenance. Usually,there is no need for major repairs during a heating season.If there is a significant decrease in thermal efficiency,difficulty in ignition,or other faults,the cause should be promptly identified and eliminated

If excessive carbon deposition causes a decrease in thermal efficiency,the cooling fin on the inner wall of water jacket and the carbon deposition in the combustion chamber should be cleaned.

The oil tank,oil pipe,and oil filtering device should be kept clean and unobstructed,and cleaned regularly according to the actual situation

The parking heater circulation system should use anti-freeze solution or a mixture of anti-freeze solution that is suitable for the ambient temperature as the coolant medium

During the season when the parking heater is not in use,the power supply of the parking heater should be disconnected,and the parking heater should be kept clean and dry.It is strictly prohibited to immerse the heater in water,rain,and prolonged exposure to direct sunlight.It is best to activate the heating function 1-2 times a month,with each heating lasting at least 5 minutes.

VIII.Measures for heater failure

If the heater malfunctions,check if the plug connection of fuse box is intact and secure The following faults can be eliminated by the user's operation.

Error description

The heater shuts down on its own.

The heater cannot be turned on.

The heater shuts down during heating process.

Potential causes

After starting or restarting,there is no combustion phenomenon,and the flame of the heater is extinguished during running.

Oil circuit supply problem of the heater

Heater shutdown during heating

process Remedial measures

Check the power supply and grounding connection of the heater Add cooling liquid according to the manufacturer's requirements

The temperature of shell of the heater is too high after the completion of installation.

1.Loosen the outlet pipe of the heater for venting until the venting is complete,and then connect the water pipe and tighten the pipe clamp after the anti-freeze solution flows out.

IX.Circuit diagram of the main board

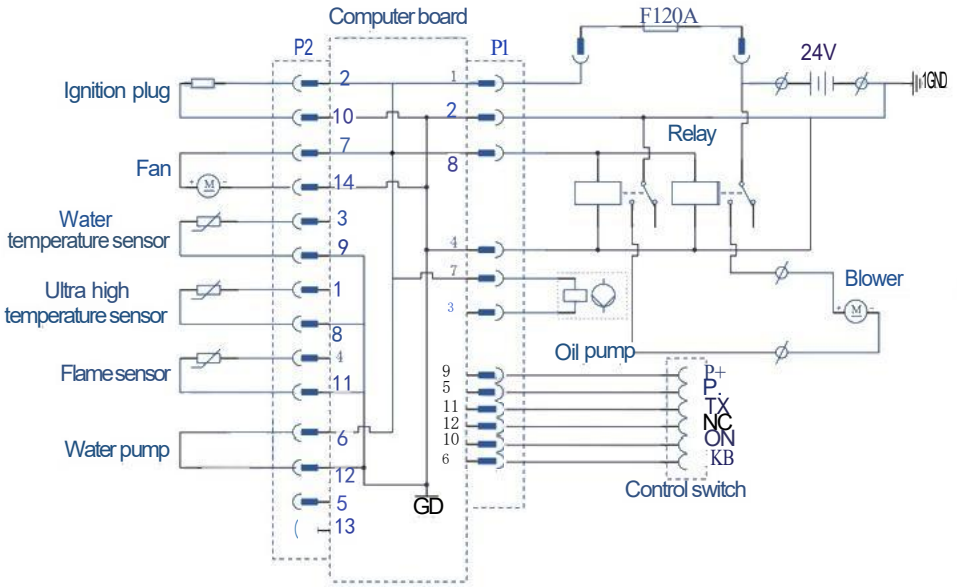

Function introduction video