Sunster

Diesel Air Car Parking Heater

User Manual

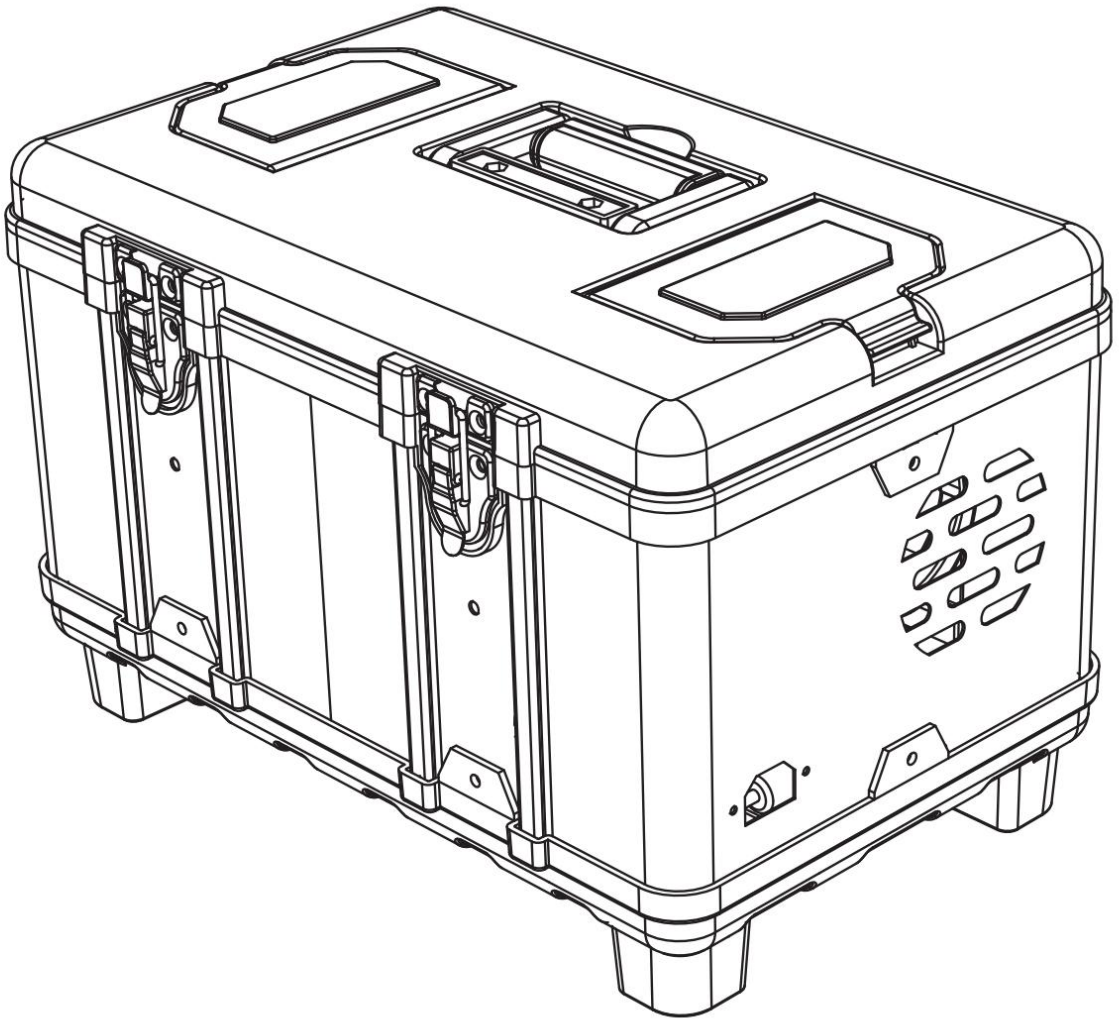

NOTE : Please read this manual carefully before use to understand the function and operation requirements of the product.

Contents

1.Contact us ····· 2

2. Function introduction ····· 3

3. Installation instructions ····· 5

4. Use the operating instructions ····· 6

5.Error code ····· 10

6.App Download Guide ····· 11

1.Contact us

Sunster is the factory's own brand and has a complete and mature technical team and production line. Sunster's product R&D team develops new products and updates product solutions every year, working with hundreds of employees to provide better heating solutions for global users, solve user problems, and make cost-effective products that customers really need. All products are certified by CE, WEE, FCC, EAC, UKCA and other authoritative organizations.

We have a 24-hour online after-sales service team. If you encounter any problems, you can directly contact the store customer service, or send an email to our after-sales email: cs@sunster.tech.

For business issues, please contact :sunster@sunster.tech

Scan the QR code to watch the product's multi-language introduction video (with subtitle translation function)

Sunster A2409pro Controller

Sunster2200BS Controller

2.Function introduction

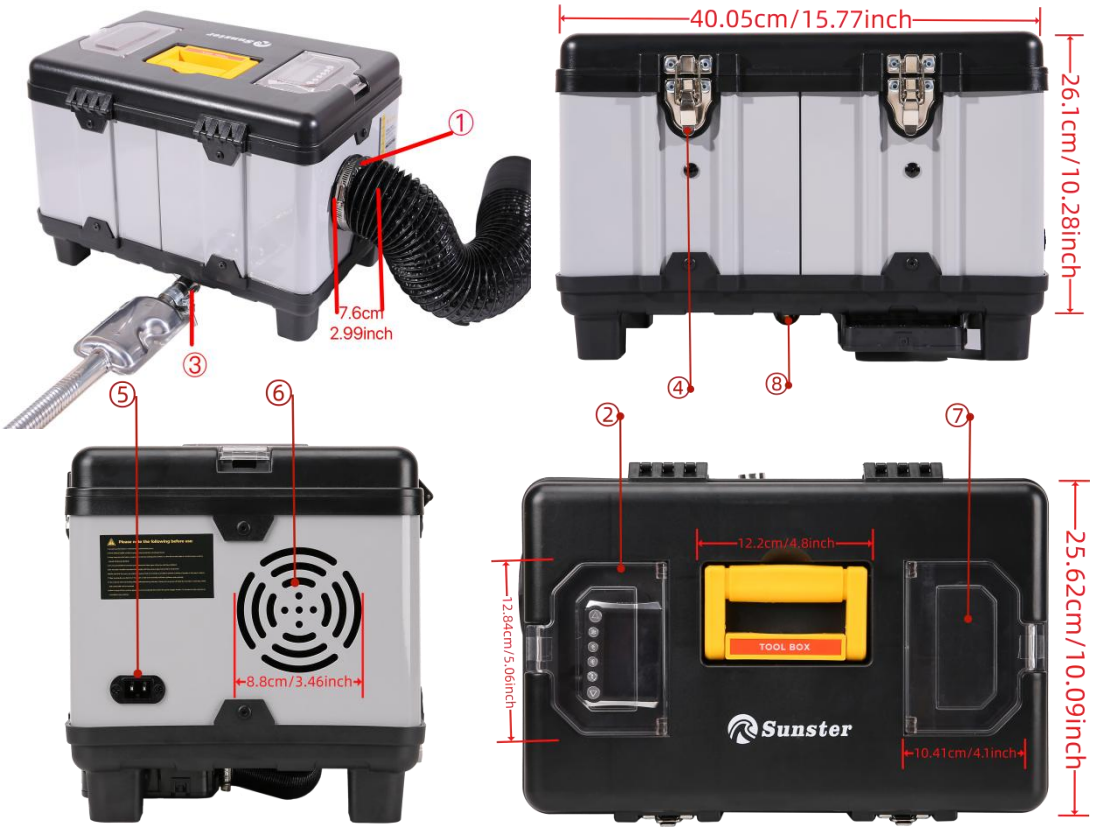

1. Hot air outlet
2. Machine upper cover
3. Exhaust pipe
4. Metal buckle
5. Power input interface
6. Air inlet
7. Switch remote control placement box
8. Air filter(The black model not include)

2.1 Product Overview

Diesel heaters are on-board heating devices that are independent of the automobile engine, and have their own fuel lines, circuits, combustion heating devices, and control devices. Originally, the machine was often used to preheat the engine and cab of a car parked in a cold and cold environment in winter, as a way to eliminate cold start wear and tear of the car. Now diesel heaters have a wider range of uses, which can be used as space heating equipment intents, indoors, and RVs, making users' living and traveling more comfortable.

2.2 Explanation of Principles (Heat Source, Heating, Control)

2.2.1 Heat source:

After the equipment is started, the ignition plug will continue to heat up, this process will take 1~3 minutes, and then the fan will be started to deliver air to the combustion chamber, and the diesel pump will also pump the diesel into the combustion chamber. After the atomized diesel is mixed with gas, it begins to burn after coming into contact with the high-temperature ignition plug, generating a large amount of heat. The high-temperature exhaust gases after combustion are discharged from the exhaust gas outlet below.

2.2.2 Heating:

The heat generated in the combustion chamber is quickly transferred to the aluminium heat exchanger and dissipated into the warm air duct via the aluminium fins. An external fan blows the gas around the heat exchanger, and the heated air is blown out of the warm air outlet.

2.2.3 Control:

The controller is embedded in the device, and the user can control the device through the switch panel connected to the controller, and the user can check the running status of the equipment, control the gear, and make an appointment through the switch panel. Users can also use the remote control or install the app developed for remote control.

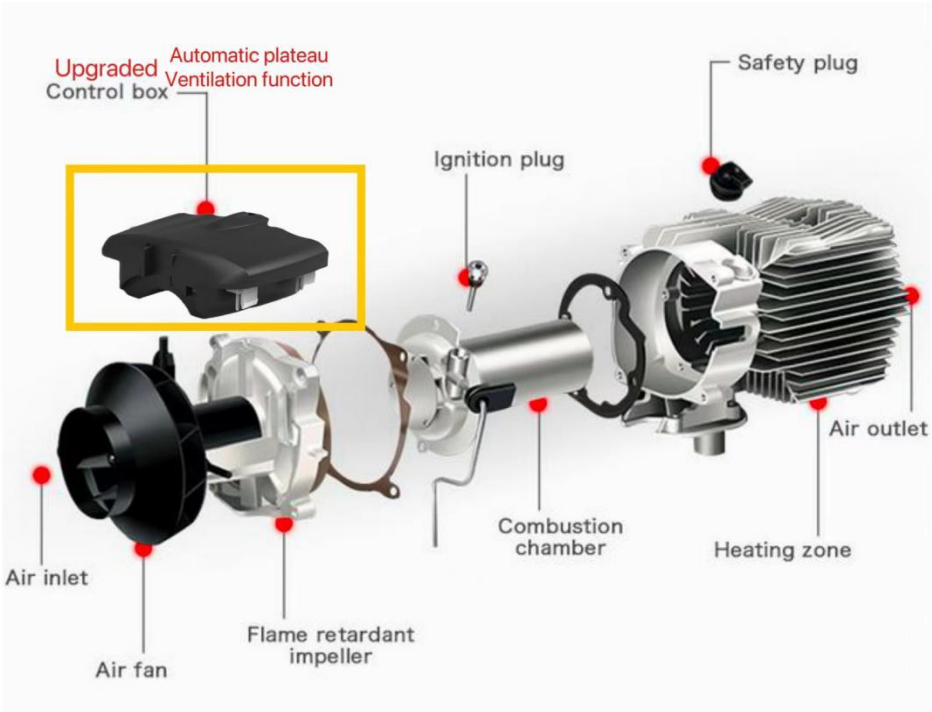

3.Installation instructions

3.1 Confirmation of Parts List



The installation difficulty of this toolbox compact is relatively low, as we've simplified many pipeline installation processes. All you need to do is to install the exhaust pipe and connect the AC-DC power apply, then you can start working. Please extend the exhaust pipe outside to expel the combustion exhaust gas.

Note: The discharged exhaust gas can reach temperatures as high as 400°C, please keep it away from your pets and children, and be aware of the gap from the ground to avoid damaging your floor or lawn.

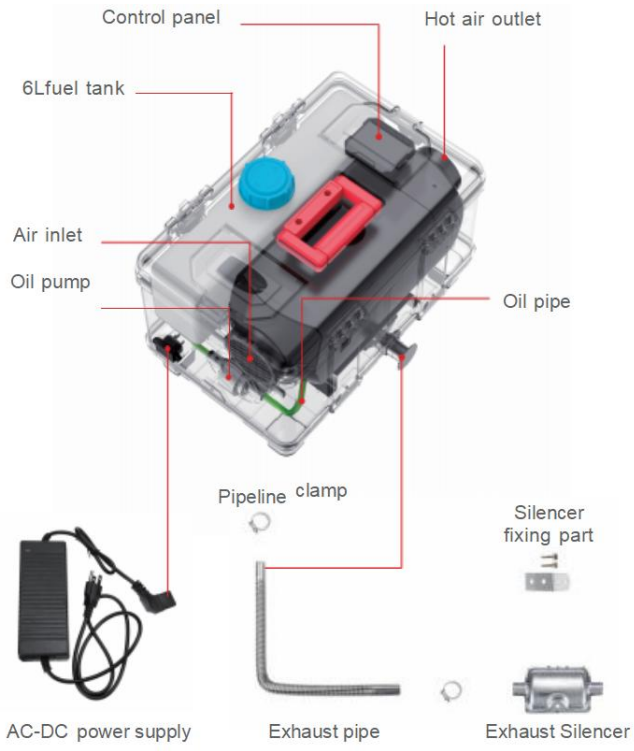

4. Use the operating instructions

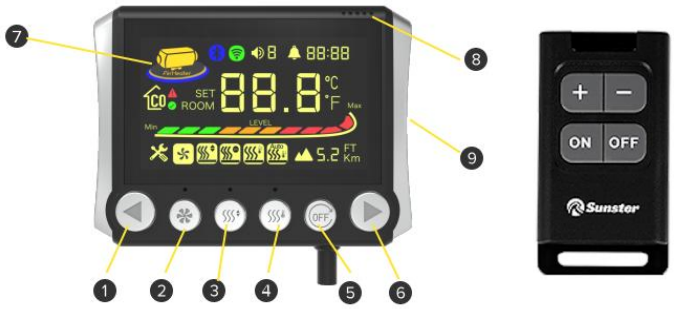

4.1 Key Introduction-2409PRO

1.Down button	2.Ventilation button
3.Gear/strong heat	4.Temperature control/constant temperature
5.Power off button	6.Up button
7.LCD display	8.Ambient temperature sensor vent
9.Speaker	

4.1 operating instructions

4.1.1 Operation Mode Description:

Ventilation mode : Only the fan works, no heating. The wind speed can be set from 1 to 10.

Gear mode : Heating according to the set gear, the setting range is 1~10

Strong heat mode : The heater runs at maximum output power, with a maximum continuous running time of 2 hours

Temperature control mode : The current operating gear is automatically adjusted according to the difference between the set temperature and the current ambient temperature . The lowest operating gear is gear 1. No shutdown. Temperature setting range 8~36℃

Constant temperature mode : The operation mode is the same as the temperature control mode. When the ambient temperature is 2°C higher than the set temperature, the heating stops. The heater enters the standby mode. When the ambient temperature is 2°C lower than the set temperature, the heater will automatically turn on and continue heating .

4.1.2 Operation method:

Power on : In shutdown mode, simply press the desired mode to power on. The LCD screen will light up to display the current operating status and data.

Power off : In the running state, press the shutdown button to turn off the heater. The LCD display window will turn off the LCD screen after the shutdown action is completed.

Mode switch : In the running state, press the mode button to switch between different modes.

Parameter adjustment: Press the decrease/increase button to adjust the setting gear or temperature

4.1.3 Function settings

Time setting: In the running state, press and hold the power off button for 3 seconds, and F0 will be displayed in the lower right corner of the LCD screen to enter the setting mode.

Press the increase/decrease button to switch the setting items. Press the ventilation button to enter the setting items. When the setting item is flashing, press the increase/decrease button. Adjust the section settings. The time format is HH : MM format, 24-hour system. Press the power off button to exit the settings.



Current time timing start time: how long to run (setting range Function switch: set to oN

The time point of timing start is 00:00~10:00. The adjustment step indicates that the timing is turned on. oF is

30 minutes in, 00:00 is the timer start to close

Unlimited operation)

- **Switch the broadcast language:** In the running state, press and hold the decrease button for 3s, and F4 will be displayed in the lower right corner of the LCD screen to enter the setting mode. Flashing, press increase/decrease to switch the language. The factory default is English.



English German Russian Mute

- **Temperature compensation setting:** When the ambient temperature displayed by the heater deviates greatly from the actual ambient temperature, the error can be reduced by setting the temperature compensation value. The factory default value is 0℃.

In the running state, press and hold the power off button for 3 seconds, the lower right corner of the LCD screen displays F0, and enters the setting mode. Press the increase button to switch

To F5, press the ventilation button, the setting value flashes. Press the increase/decrease button to adjust the temperature compensation value, the adjustment range is -9℃~9℃. • **Constant temperature function setting:** The constant temperature function is only applicable to the setting on or off on the app , and there is no need to set it separately on the heater.

- **Temperature unit switching:** In the running state, press and hold the increase button for 3s to cycle between Fahrenheit (℉) and Celsius (℃). The factory default is Fahrenheit (℉).
- **Height unit switch:** In the running state, press and hold the power off button for 3 seconds, the lower right corner of the LCD screen displays F0, and enters the setting mode. Press the increase button to adjust to F8 is displayed in the lower right corner of the LCD screen. Press the ventilation button, the altitude unit flashes, and then press the increase/decrease button to switch between Km and Kft . Press the power off button to save the setting. The factory default is Km .

Backlight brightness level setting: In order to reduce the impact of the control panel backlight on users in dark environments, the backlight will automatically turn off when there is no operation on the control panel for 120 seconds.

The brightness can be set automatically. The factory default value is 100. The setting method is as follows:

In the running state, press and hold the power off button for 3 seconds, the LCD screen will display F0 in the lower right corner, and enter the setting mode. Then press the increase button to adjust

When F9 is displayed in the lower right corner of the LCD screen, press the ventilation button and the backlight brightness level value flashes. Then, press the increase/decrease button. Adjust the backlight brightness value. The adjustment range is 0~100, 100 means the backlight brightness does not decrease, 0 means the backlight is off , press any button to turn on the backlight Light up.

- **Sub-device network configuration:** In the off state, press and hold the off button and the add button for 3 seconds to enter the setting mode, and the LCD screen flashes. Add characters. At this time, after the sub-device enters the network configuration mode, the LCD screen displays 5ul

Ambient temperature value: In the running state, press and hold the shutdown button for 3 seconds, the lower right corner of the LCD screen displays F0, and enters the setting mode. Then press the increase button to adjust When Fb is displayed in the lower right corner of the LCD screen , press the ventilation button and the value displayed in the upper right corner will flash .

To adjust, oN is the ambient temperature of the sub-device, oF is the ambient temperature of the control panel, and the factory default setting is oN . ▲ If set to On , when the control panel is disconnected from the sub-device, the ambient temperature of the control panel is taken.

- **Remote control pairing/clearing:** In the off state, press and hold the increase button for 3s, and the upper right corner of the LCD screen will display P-1 When pressing any button on the remote control , the control panel Automatically shut down, indicating successful matching.

When the control panel is powered off, press and hold the power off button, then turn on the power. After 7 seconds, the LCD screen displays5Uu E Clearable remote control Device matching information.

4.1.4 Run parameter view

In the running state, press and hold the increase button and the decrease button for 3 seconds to enter the engineering mode and view the running status of the heater .

En 00: Heater main board firmware version	**En 05: Panel ambient temperature**
En 01: Fault code (if any)	**En 06: Altitude**
En 02: Furnace temperature	**En 07: Remote control matching**
En 03: Supply voltage	**En 08: The last four digits of the Bluetooth ID**



4.2 Key Introduction-2200BS

【 ⏻ 】： Power button;
【 ▲ 】： Gear/temperature/item adjustment key;
【 ▼】 : Gear/temperature/item adjustment minus key;
【M】: Mode switch/setting Key screen display area

Working Mode

① In gear mode , 1 ~ 10 The gear position can be adjusted within the gear range;

② Temperature control module Mode Next, 8 ~ 36℃ Fan Wai Neko Tune Festival set up Place Temperature, control system switch of files Bit Follow drive room Inside of temperature Degree Changes, when temperature Degree High or low When low, control switch Will be Dynamic Save money Row position, fast DA To the set temperature, making the heater run more intelligently , economy.

③ when In operation Trade middle out now In case of failure, pass control open Off Display window Mouth flash Flashing display fault generation code easy to Even add allow Really intuitive try to find arrive Fault exist.

Instructions:

● **On/off:** Press [⏻】Turn on the power; in the powered-on state, press 【 ⏻】to shut down the power;

● **Mode switch:** In temperature control mode, press [M 】 Switch to the gear mode. In the gear mode, press 【 M 】 Switch to temperature control mode;

● **Gear adjustment:** press [▲】 Operation gear/temperature +1, maximum 10 gears/36℃, press【 ▼】 to switch to gear/temperature - 1, minimum to 1 gear/8 ℃;

●**Basic settings:Reference video**

●**Engineering mode：** When the device is powered on, press and hold [▲】 【 ▲】 3s Enter engineering mode, press Move【 ▲ 】 Item +1, press【 ▼】 Item-1, data items are displayed in the display area in engineering mode;

000: Heater mainboard version number;	001: fault code;	002 Shell temperature;	003: Supply voltage;	004: Heater operating position;
005: Cab temperature;	006: Altitude;	007: Oil pump mode;	008: Remote control matching;	009: Bluetooth name;
010: Restore factory settings;				

Remote control quick pairing : When the device is powered on , press 【 ▲ 】 3s The screen displays 'P - 0 1'. Press any button on the remote control at this time to successfully match. After success, it will automatically return to the running interface.

✧ clear remove superior Second-rate remote control match match number According to: Electric Inspection hour long according to【 ⏻ 】boundary noodle Show Display “CLr ” on beginning clear Except, straight to screen screen Show Show" SUC” loose open according to key clear remove remote control match match number according to become achievement;

● **Bluetooth Matching:** Switch to engineering mode 009, the interface displays "4 is the Bluetooth name", then open the APP to search for settings, find the Bluetooth name corresponding to this switch, and click Match. success After automatic return run interface;

● **Word cut Change :** Press and hold [M] [▼ 】 3s to switch , RU stands for Russian, EN Indicates English, GE For German, OF Indicates that the voice is turned off;

● **Pump oil Mode** : First Second-rate power ups close machine shape state Press down Live【 ▼】 7s, screen Screen display Show open beginning 30 0 s count Open beginning Pump Oil, pour Timing Knot bundle Pump Oil Close machine , middle way stop according to move 【 ⏻ 】 Knot bundle Pump oil and close machine;

5. Error code

Error Code	Type of fault	Solution
E01	Supply Voltage Overrun	Check the battery output voltage whether between in 9V and 16V for the 12V Heater and between 18V and 30V for 24V Heater
E03	Ignition unit fault	Check the Ignition plugin whether disconnected if not Replace it with a new one
E04	pulse pump fault	Check the pump plugin whether disconnected if not replace it with a new one
E05	Overheating	Check the air inlet and outlet whether block
E06	Fan fault	Check the Fan plugin whether disconnected if not replace it with a new one
E07	Air intake sensor abnormality	Mainboard failure, replace the mainboard
E08	Lack of fuel	Check the fuel tank whether empty and add it
E09	Overheat sensor fault	Check the sensor plugin whether disconnected if not replace it with a new one
E10	Startup failure	Check the fuel tank whether empty and add it or Check the fuel pipe whether blocked

6.App Download Guide

6.1 How to download an app?

Android: Scan to download Android app or search '**Sunster**' in Google Play.
IOS : Scan to get IOS app or search '**Sunster**' in App store.